Double Sided Blade Sign on Corner Building

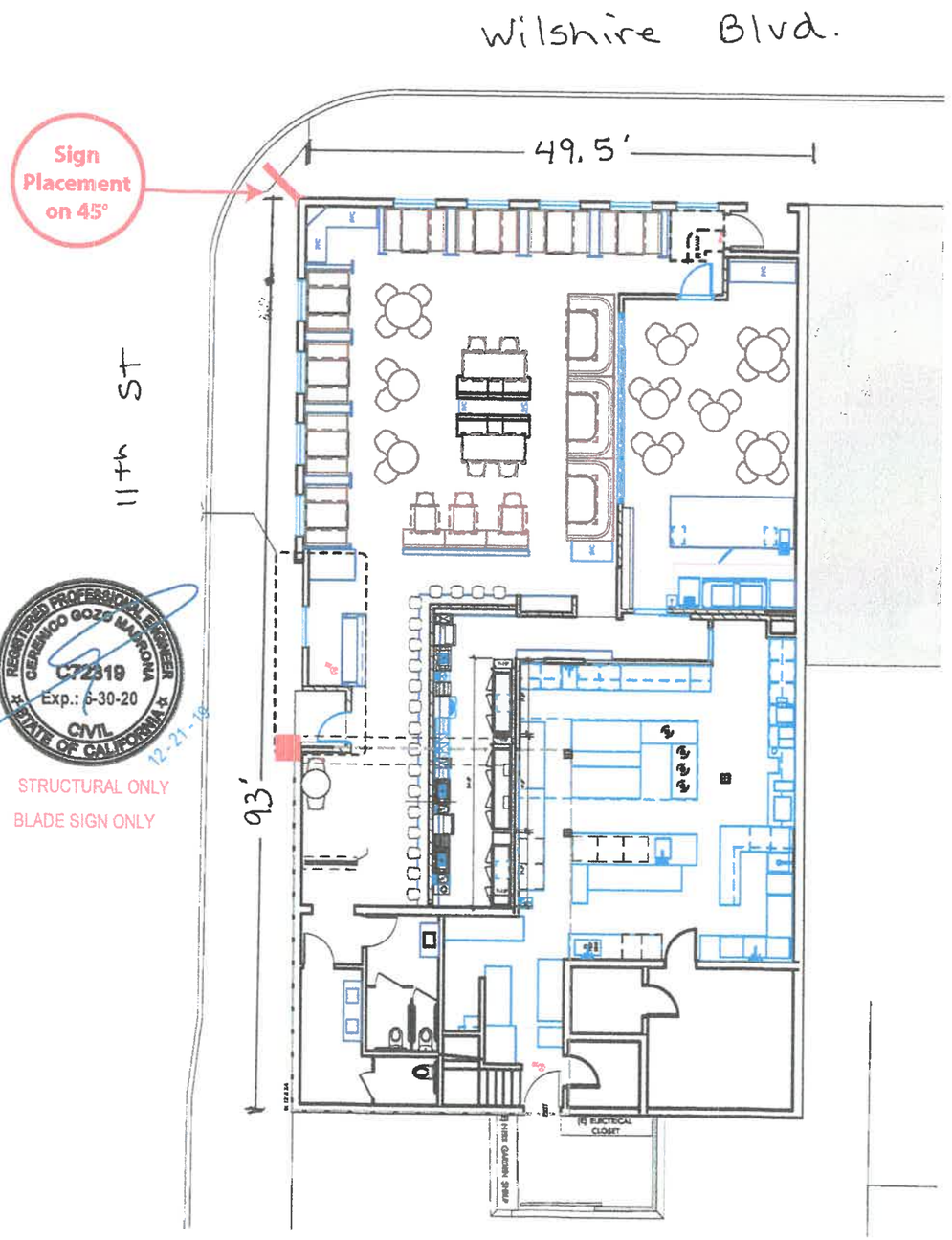

REGISTERED PROFESSIONAL ENGINEER
GERONICO GOZO MADRONA
C72319
Exp.: 6-30-20
CIVIL
STATE OF CALIFORNIA
12-21-18

STRUCTURAL ONLY

BLADE SIGN ONLY

N

image 360

363 Coral Circle
Suite B
El Segundo, CA 90245

310.577.0300
http://www.image360.com/mb.ca/

Client: Citrin

Location: 1104 Wilshire Blvd, Santa Monica, CA 90401

Date: 12/06/19

Sign Type

Non-Illuminated Double Sided Blade Sign Mounted on Corner of Building

Drawing:

Corner Placement

Total Sign Square Footage
6.375 Sq.Ft.

Double Sided Blade Sign on Corner Building

363 Coral Circle
Suite B
El Segundo, CA 90245
310.577.0300
http://www.image360.com/mb.ca/

Client: Citrin

Location: 1104 Wilshire Blvd, Santa Monica, CA 90401

Date: 12/06/19

Sign Type

Non-Illuminated Double Sided Blade Sign Mounted on Corner of Building

Drawing:

Front Elevation

Double Sided Blade Sign on Corner Building

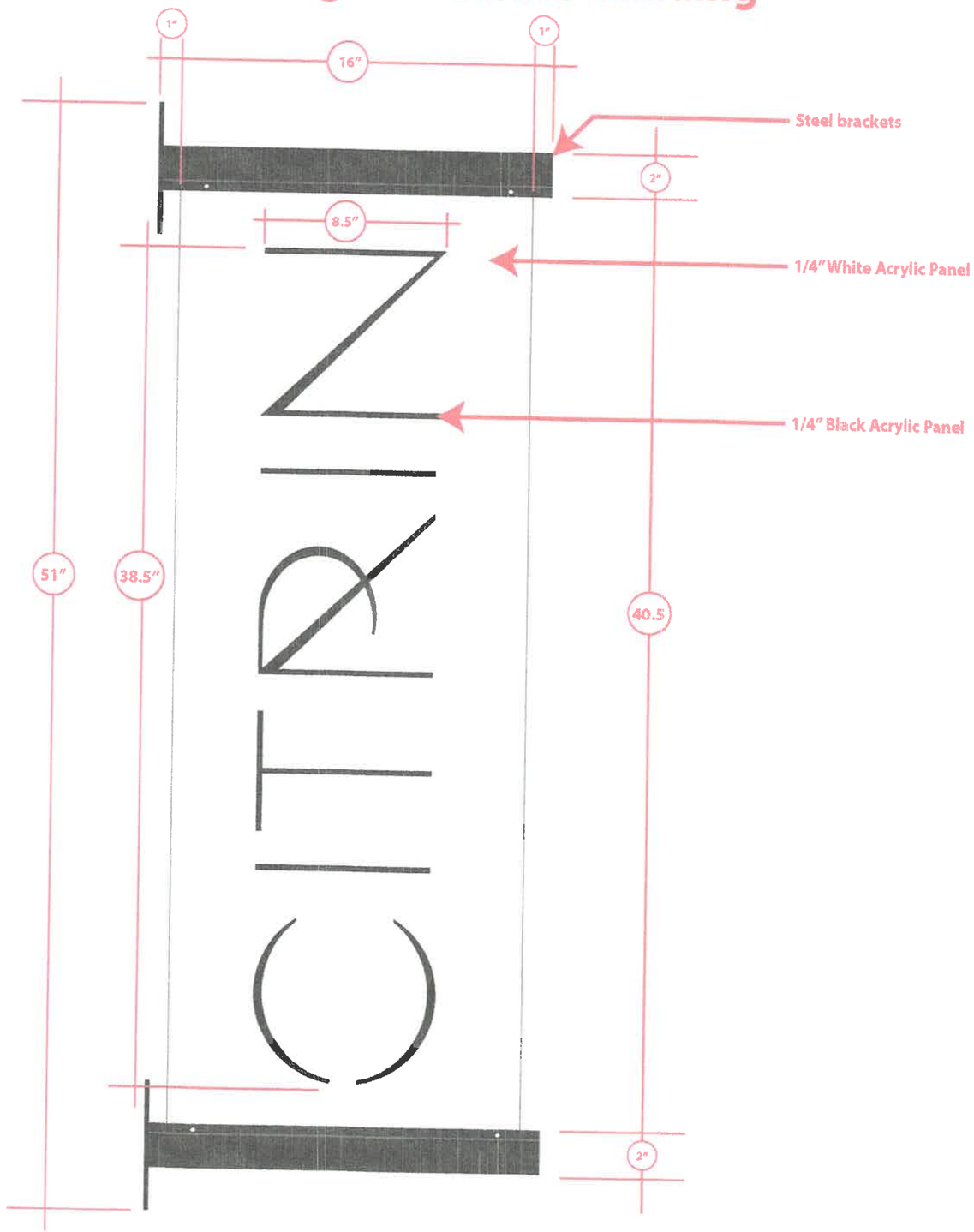

Double Sided

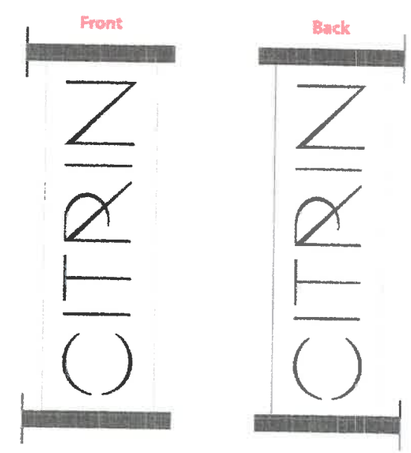

Color

White

Black

363 Coral Circle
Suite B
El Segundo, CA 90245
310.577.0300
http://www.image360.com/mb.ca/

Client: Citrin

Location: 1104 Wilshire Blvd, Santa Monica, CA 90401

Date: 12/06/19

Sign Type

Non-Illuminated Double Sided Blade Sign Mounted on Corner of Building

Drawing:

Overall Basic Dimensions and Orientation

Total Sign Square Footage
16" x 40.5 " = 4.50 Sq.Ft.

Double Sided Blade Sign on Corner Building

Top & Bottom Steel Brackets to Hold Sign Panel

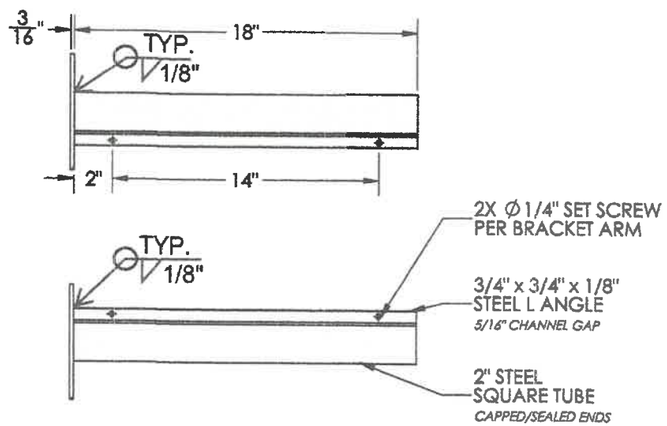

FRONT VIEW

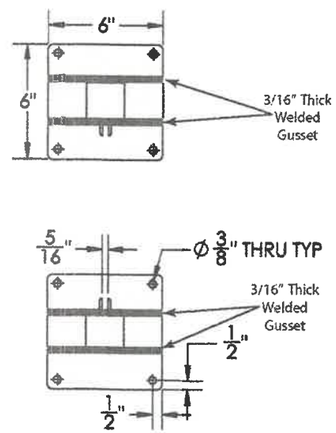

SIDE VIEW

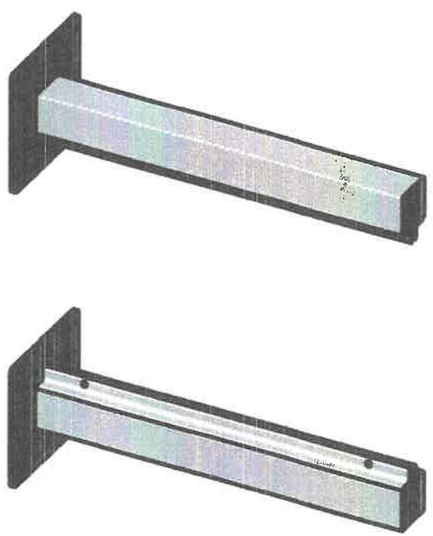

Color/Finish: Textured Black Powder Coat

Corner Mount Steel Brackets

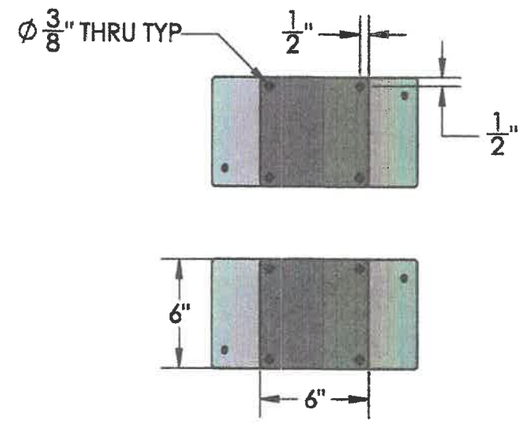

FRONT VIEW

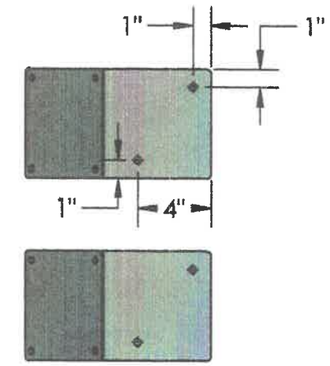

SIDE VIEW

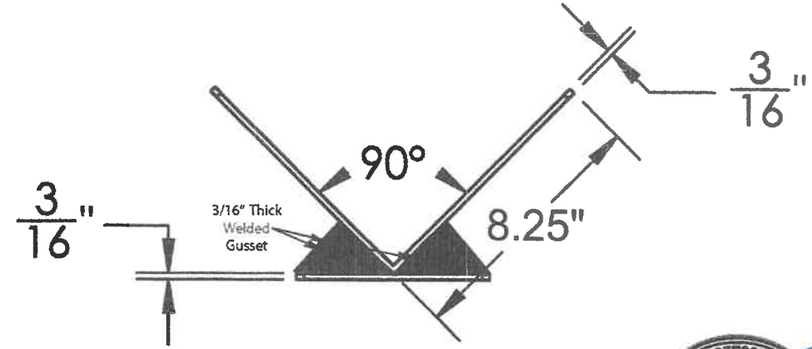

TOP VIEW

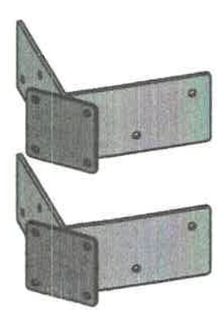

REGISTERED PROFESSIONAL ENGINEER
CERONICO GOZO MADRONA
C72319
Exp.: 6-30-20
CIVIL
STATE OF CALIFORNIA
12-21-19

STRUCTURAL ONLY
BLADE SIGN ONLY

Color/Finish: Textured Black Powder Coat

363 Coral Circle
Suite B
El Segundo, CA 90245
310.577.0300
http://www.image360.com/mb.ca/

Client: Citrin

Location: 1104 Wilshire Blvd, Santa Monica, CA 90401

Date: 12/06/19

Sign Type

Non-Illuminated Double Sided Blade Sign Mounted on Corner of Building

Drawing:

Bracket Specifications

Total Sign Square Footage
6.375 Sq.Ft.

Double Sided Blade Sign on Corner Building

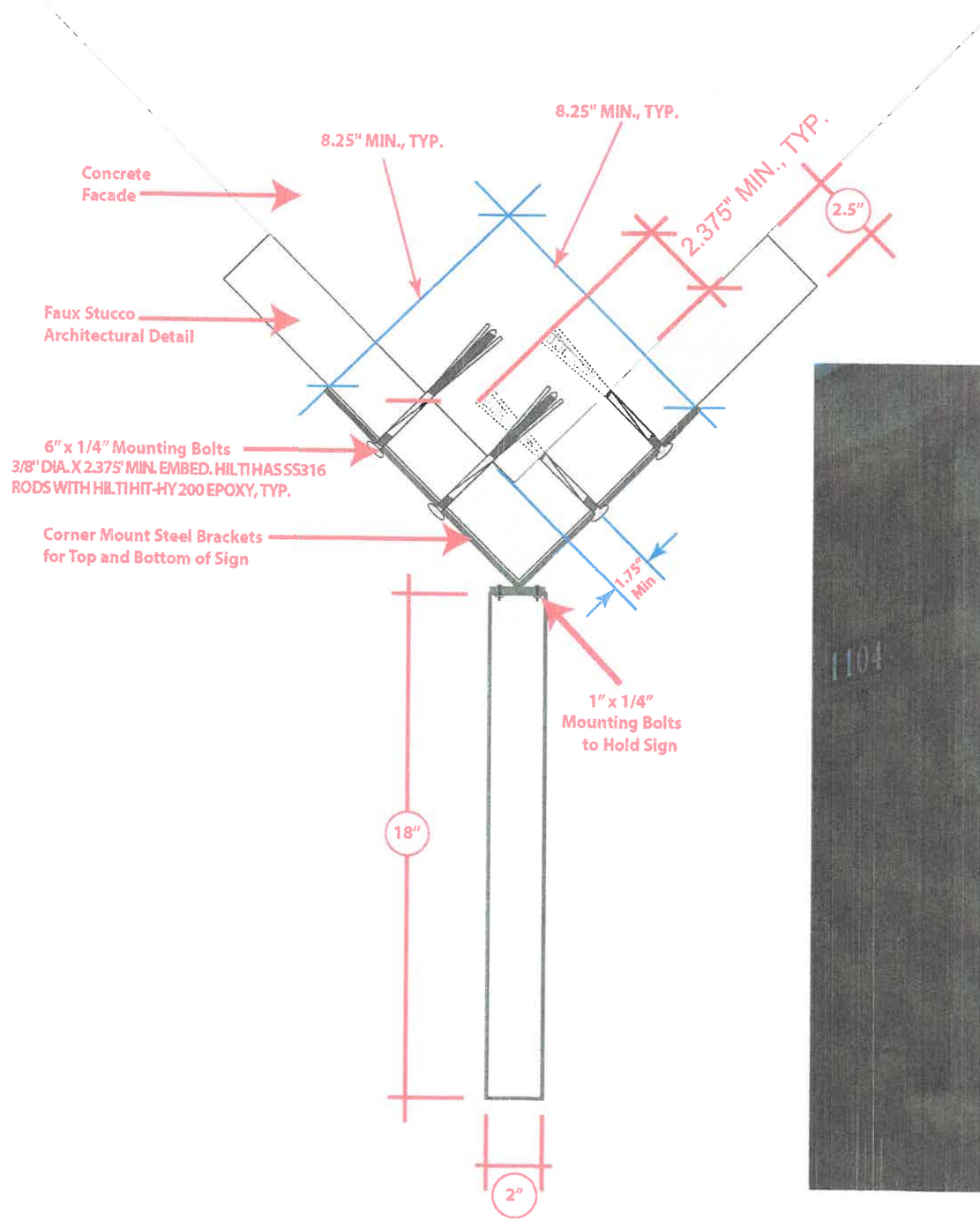

REGISTERED PROFESSIONAL ENGINEER
CEDRINICO GOZO MAJARONA
C72319
Exp.: 6-30-20
CIVIL
STATE OF CALIFORNIA
12-21-19

STRUCTURAL ONLY

BLADE SIGN ONLY

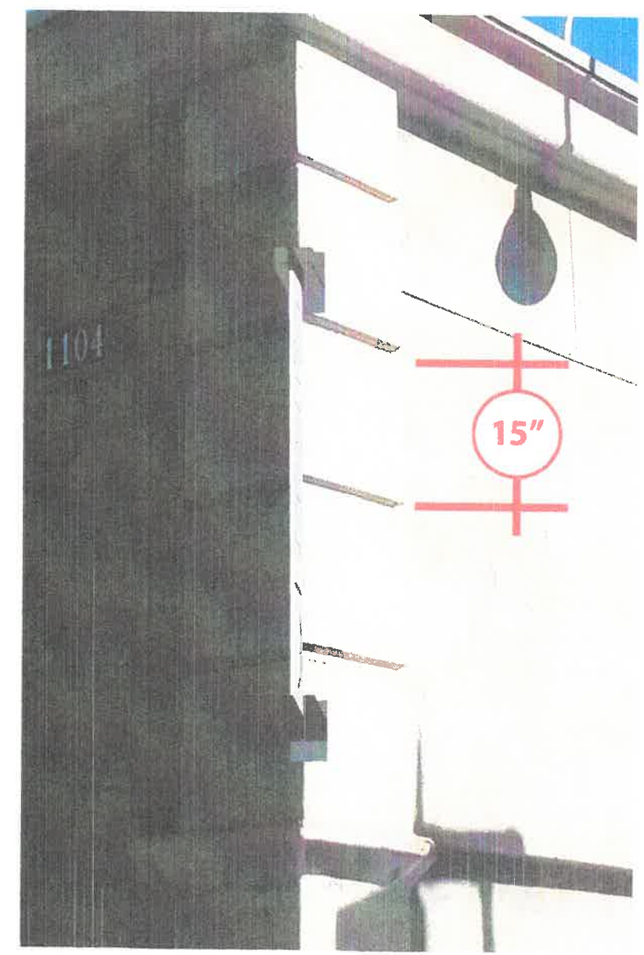

363 Coral Circle
Suite B
El Segundo, CA 90245
310.577.0300
http://www.image360.com/mb.ca/

Client: Citrin

Location: 1104 Wilshire Blvd, Santa Monica, CA 90401

Date: 12/06/19

Sign Type

Non-Illuminated Double Sided Blade Sign Mounted on Corner of Building

Drawing:

Install Plan

Total Sign Square Footage
6.375 Sq.Ft.