Parking

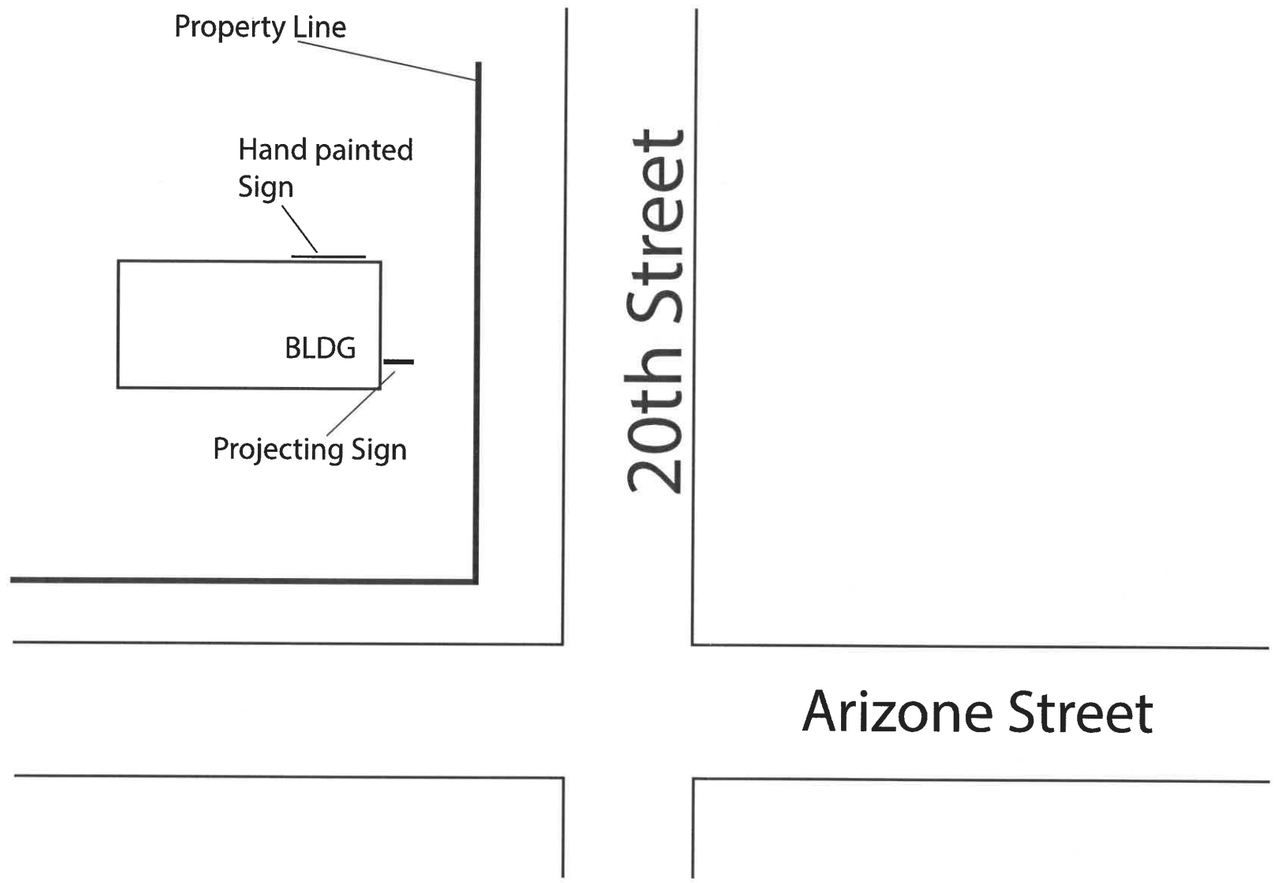

SIGNOGRAPH
USA

1700 N. Spring Street
Los Angeles, CA 90012
Tel: (818) 288 3747
E-mail: signographusa@aol.com

Project
Tartine
1925 Arizona Street
Santa Monica, CA

Subject:

These drawings are the exclusive property of Signograph USA
No unauthorised use or duplication is permitted without
the written consent of Signograph USA

Rivisions

No.	Date	By	Description

Job No.	~~Approved~~ By / Date
	Engr. Mgr.
Drawn:	Opr. Mgr.
Date:	Proj. Mgr.
Scale: Not to scale	Sales Mgr.
File:	Sheet # 1 of 1

Comments:
Drawing not to scale

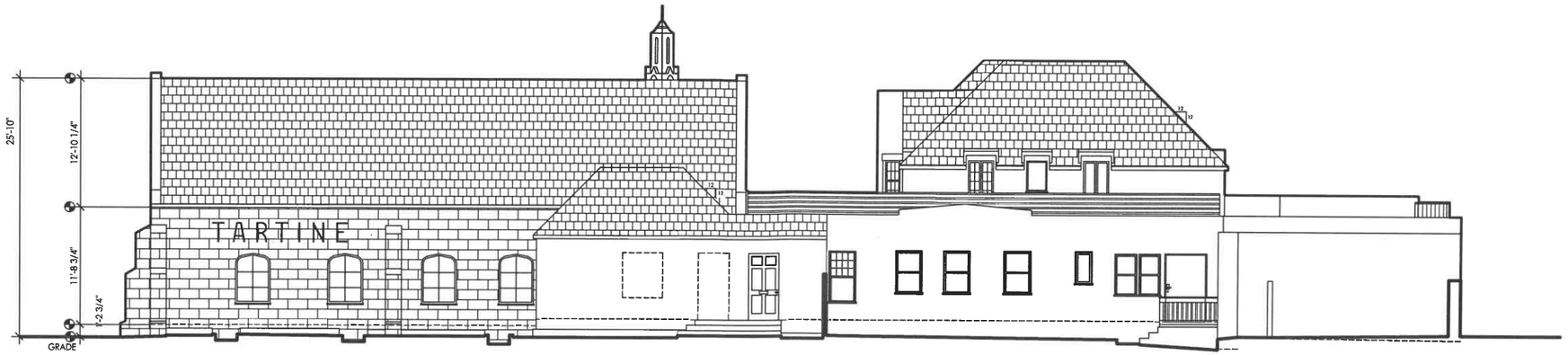

164"

24"

TARTINE

SIGN:
TARTINE will be painted directly on the wall, satin black
Total sign area 27.3 sqft

SIGNOGRAPH USA
1700 N. Spring Street
Los Angeles, CA 90012
Tel: (818) 288 3747
E-mail: signographusa@aol.com

Project
TARTINE
1925 Arizona Street
Santa Monica, CA

Subject:

These drawings are the exclusive property of Signograph USA
No unauthorised use or duplication is permitted without
the written consent of Signograph USA

Rivisions

No.	Date	By	Description

Job No.	Approved By / Date
	Engr. Mgr.
Drawn:	Opr. Mgr.
Date:	Proj. Mgr.
Scale: Not to scale	Sales Mgr.
File:	Sheet # 1 of 1

Comments:
Drawing not to scale

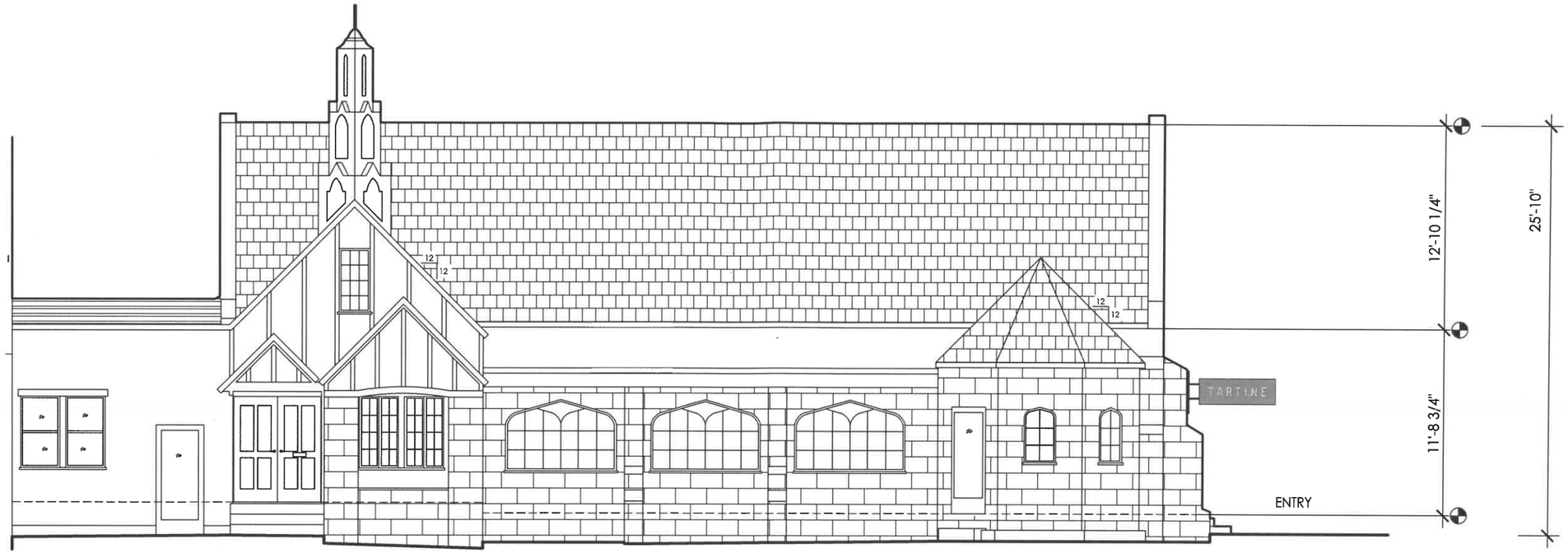

SIGNOGRAPH
USA

1700 N. Spring Street
Los Angeles, CA 90012
Tel: (818) 288 3747
E-mail: signographusa@aol.com

Project

TARTINE
1925 Arizona Street
Santa Monica, CA

Subject:

These drawings are the exclusive property of Signograph USA
No unauthorised use or duplication is permitted without
the written consent of Signograph USA

Rivisions

No.	Date	By	Description

Job No.	Approved By / Date
	Engr. Mgr.
Drawn:	Opr. Mgr.
Date:	Proj. Mgr.
Scale: Not to scale	Sales Mgr.
File:	Sheet # 1 of 1

Comments:

Drawing not to scale

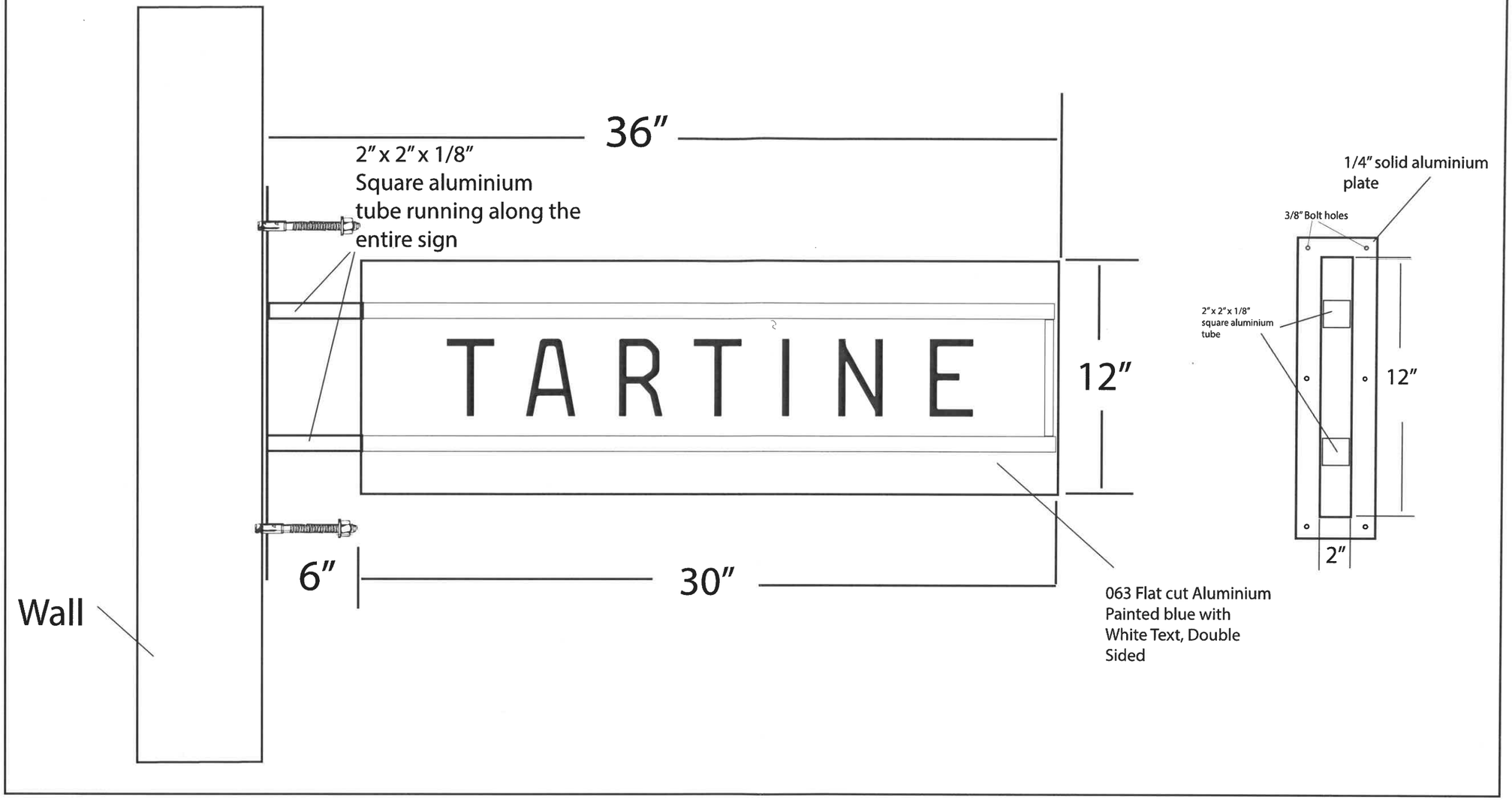

SIGNOGRAPH
USA

1700 N. Spring Street
Los Angeles, CA 90012
Tel: (818) 288 3747
E-mail: signographusa@aol.com

Project

TARTINE
1925 Arizona Street
Santa Monica, CA

Subject:

These drawings are the exclusive property of Signograph USA
No unauthorised use or duplication is permitted without
the written consent of Signograph USA

Rivisions

No.	Date	By	Description

Job No.	~~Approved~~ By / Date
	Engr. Mgr.
Drawn:	Opr. Mgr.
Date:	Proj. Mgr.
Scale: Not to scale	Sales Mgr.
File:	Sheet # 1 of 1

Comments:

Drawing not to scale