Roof Forms

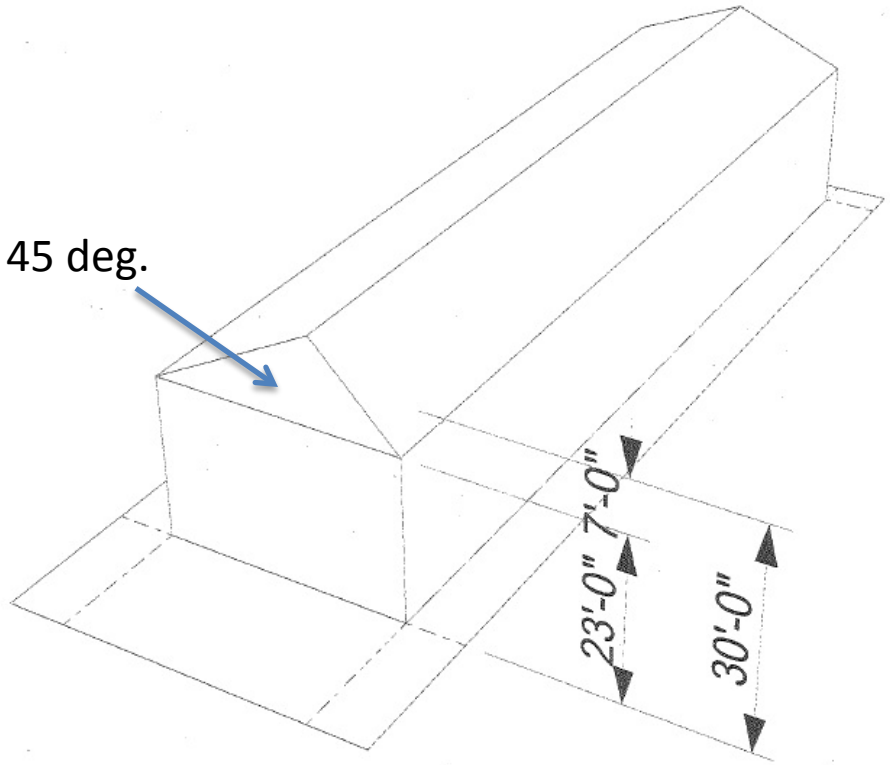

Pitched Roof Compliant with proposed R2 height standards