Roof Forms

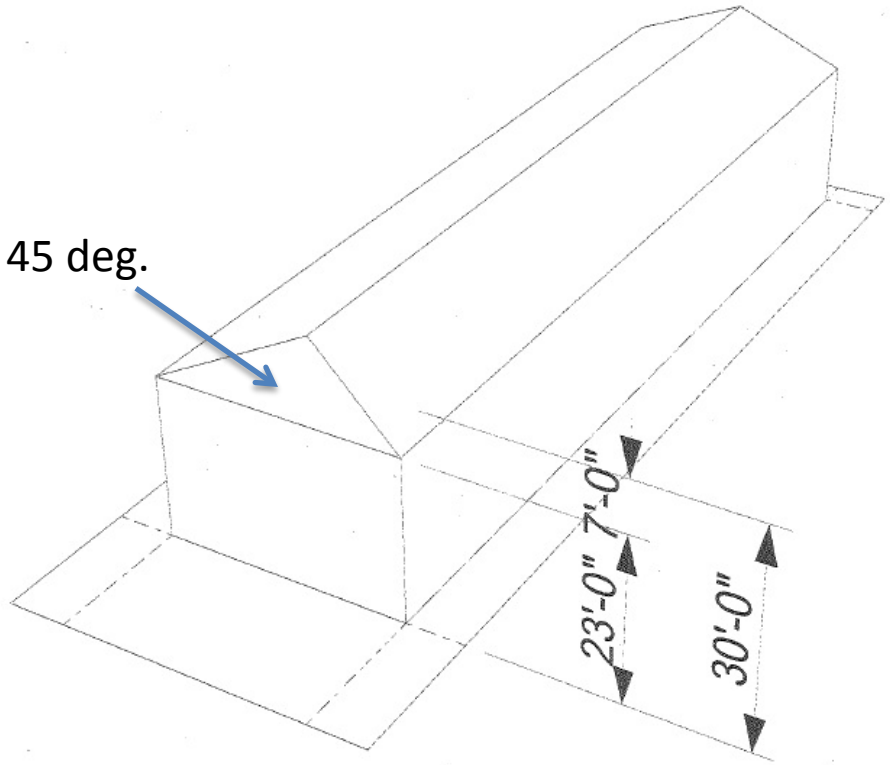

Pitched Roof Compliant with current R2 height standards